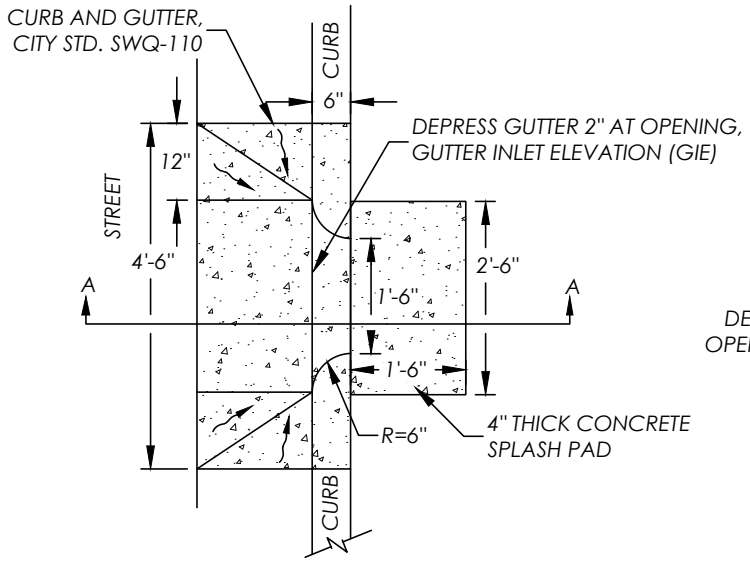

PLAN VIEW

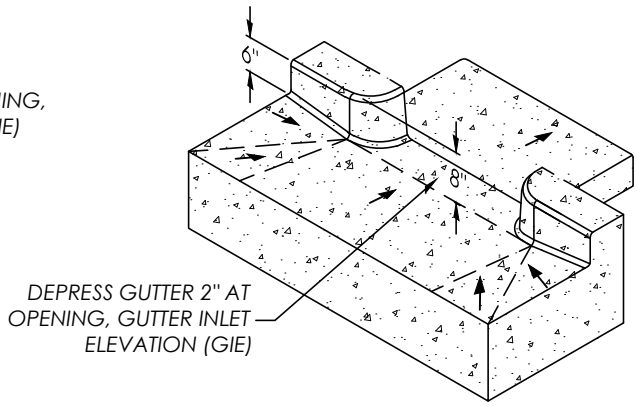

PERSPECTIVE VIEW

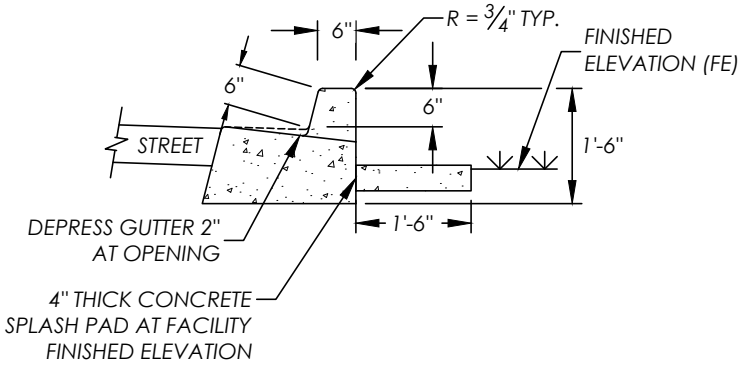

SECTION A-A

DESIGN NOTES

1. FOR USE WITH STORMWATER FACILITIES WITH FLAT BOTTOMS.
2. PROVIDE SPOT ELEVATIONS ON PLANS (FE, OE, GIE, IE). SEE CITY STD. SWQ-100.
3. CURB AND WALL DETAILS MAY BE MODIFIED BY CIVIL AND GEOTECHNICAL ENGINEERS AND APPROVED BY PUBLIC WORKS DEPARTMENT.
4. CURB HEIGHT MAY BE REDUCED TO 4-INCHES WHERE ADJACENT TO A SIDEWALK. SEE CITY STD. SWQ-110 AND SWQ-111.

CONSTRUCTION NOTES

1. AFTER CONSTRUCTION PLACE SAND BAGS AT GUTTER OPENINGS TO KEEP STORM FLOWS FROM ENTERING FACILITY UNTIL VEGETATION IS ESTABLISHED.

CITY OF NAPA — PUBLIC WORKS DEPARTMENT

CURB CUT INLET FOR PLANTERS	DRAWN BY: LFM	CHECKED BY: TCW
	DATE: 06/2018	APPROVED BY: JRL
	SCALE: NONE	DRAWING NO. SWQ-120
	FIELD NOTES:	

G:\PubWks\STORMWATER PROGRAM\E.12 Post Construction Stormwater Management Program\E.12.c-f_Site Design Measures\Post-Construction Standards\AutoCad Drawings\SWQ-120 - Curb Cut Inlet for Planters.dwg